Steering, Brake & Suspension Specialists

#LS1-KS Installation Instructions

for Original Position LS V8 Engine Mount Adapter

Parts List:

2 ea	Engine Mount Adapter
6 ea	3/8 Flat Washer
6 ea	3/8 Lock Washer
6 ea	3/8 Nut
8 ea	10mm Counter Sink Bolt

Instructions:

1. Using the countersink 10MM bolts attach the adapter brackets to the engine.

2. Install the mounts onto the adapter brackets. Tighten the mounts to the brackets using the flat washers, lock washers, and nuts.

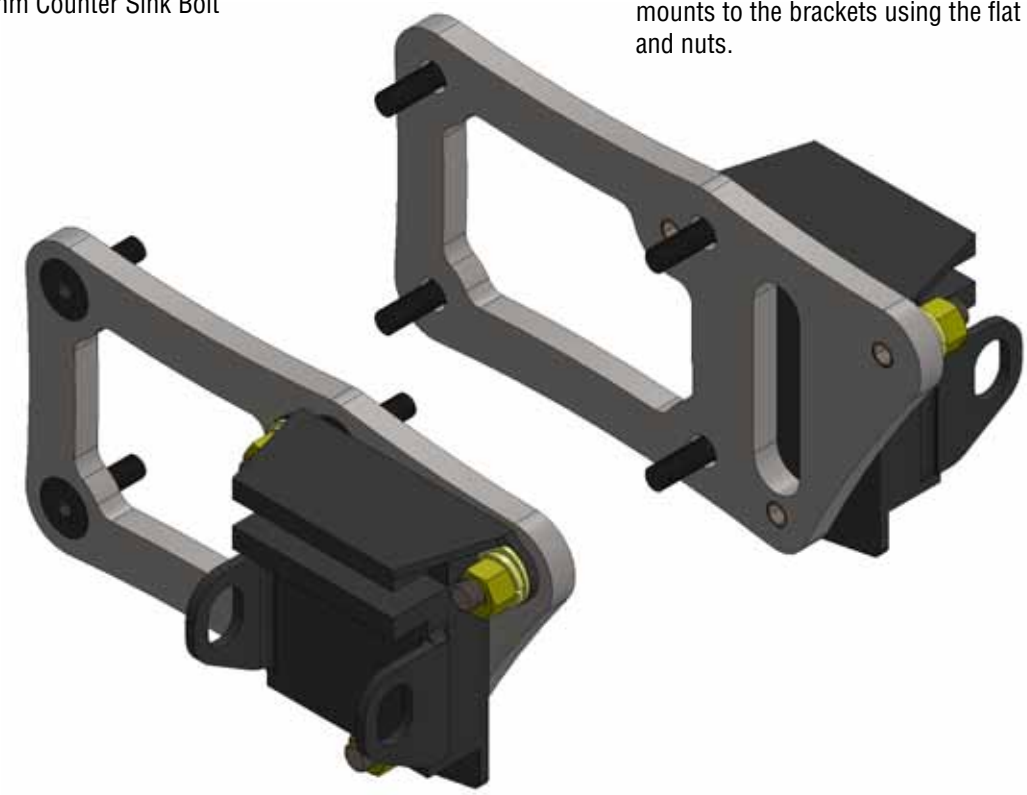

Note:

Due to variations between different manufactures' engine mounts, some modifications may be necessary:

If the bump on the back side of the mount interferes with the adapter, you may need to remove a portion of the bump; a grinder works well for this.

Some mounts utilize a steel backing plate. In this case, the new adapter will act as the backing plate.

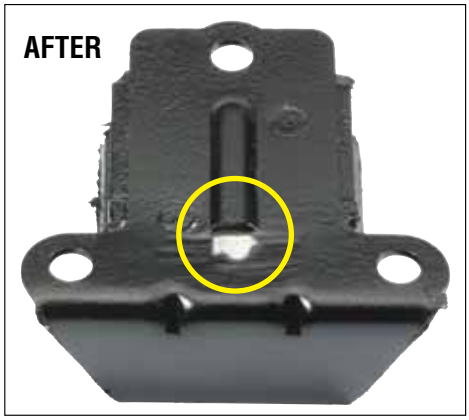

Classic Performance Products, Inc. **714.522.2000** | fax 714.522.2500
378 E. Orangethorpe Ave. | Placentia, CA 92870 | www.classicperform.com

Revised 02/08/12

Steering, Brake & Suspension Specialists

LS1-KS
Stock Position

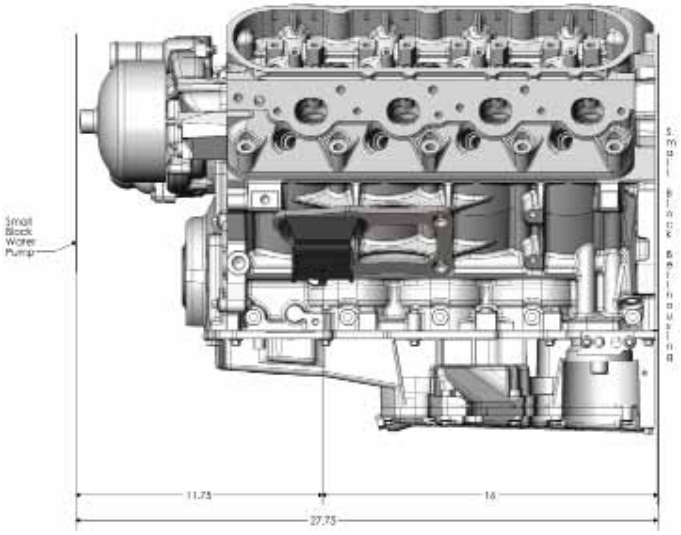

LS1-K125
1-1/4" Forward

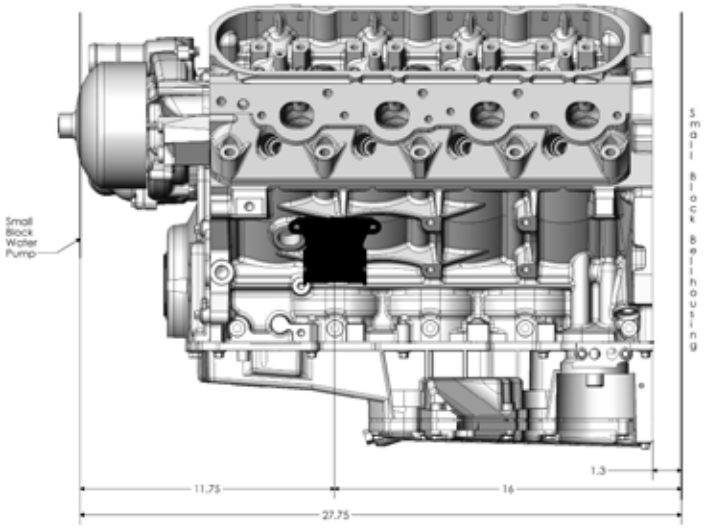

LS1-K3
3" Forward

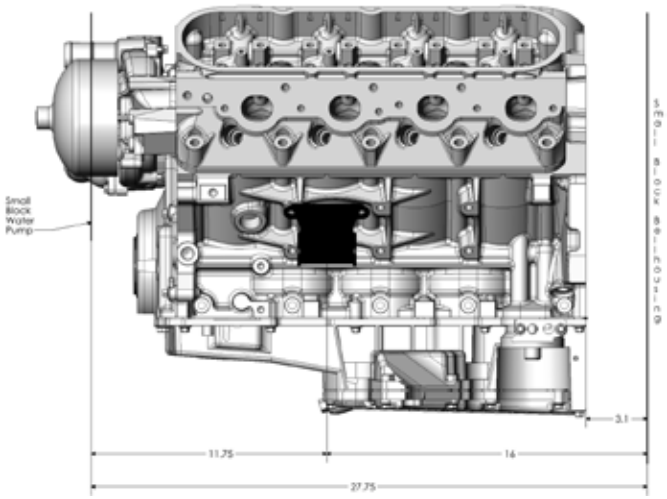

LS1-K
4" Forward

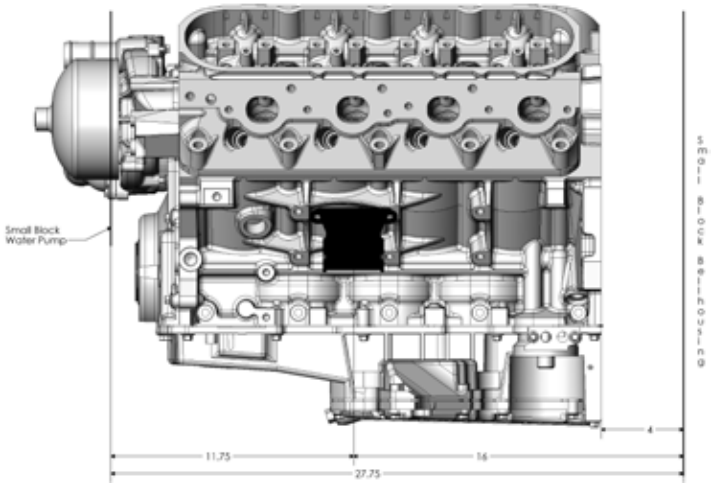
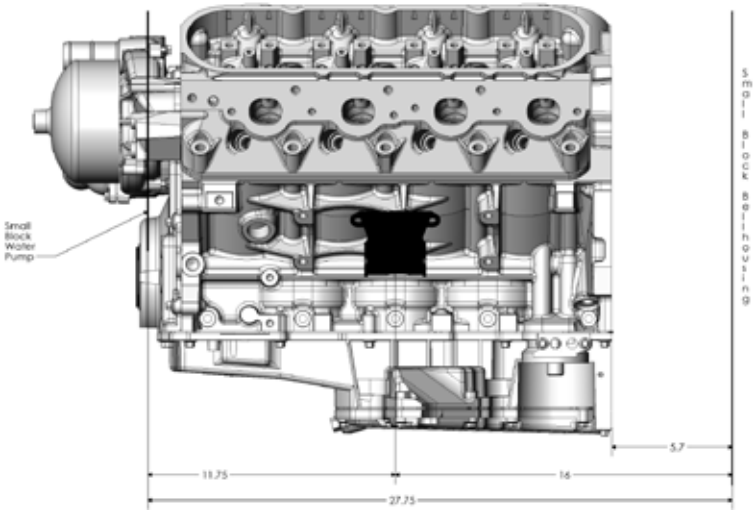
LS1-K125
5-3/4" Forward